All technical information cantained in this document is the exclusive property of EXTREME Converting and may neither be used nor disclosed without its prior written consent.

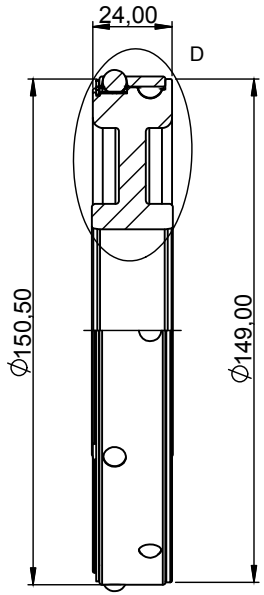

SECTION A-A
SCALE 2 : 3

Suitable CORE I/D
6.00" - 6.023"
152.40 mm - 153.00 mm

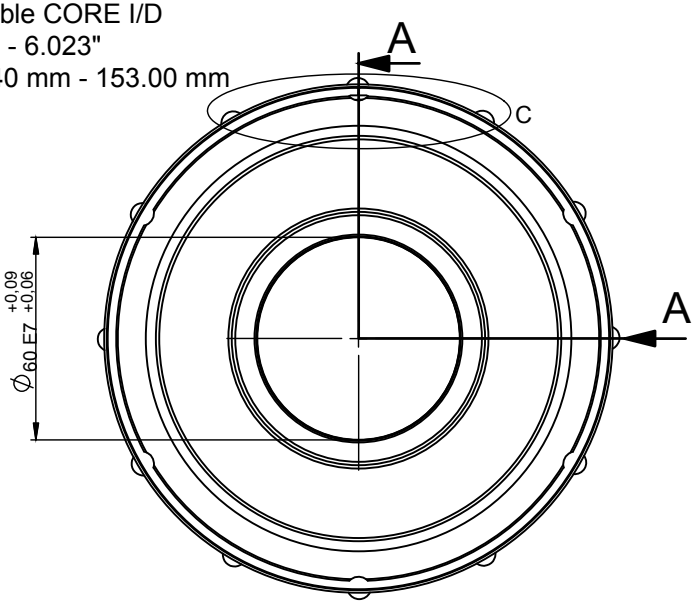

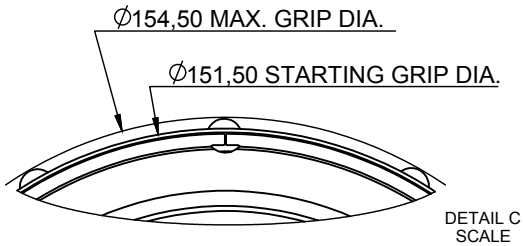

DETAIL C
SCALE

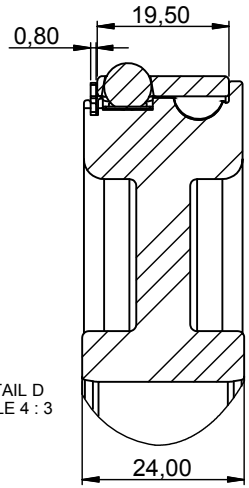

DETAIL D
SCALE 4 : 3

TECHNICAL SPECT.		ASSEMBLY LIST		
Core ID	6" (152,4 mm)	Stock No	Stock Name	Qty
Cartrige ID	Ø60 E7	861001	Cam Body	1 pcs.
Max. Grip Dia.	Ø154,50 mm	861002	Synchro Ring	1 pcs.
Starting Grip Dia.	Ø151,50 mm	860003	Steel Ball	12 pcs.
Width	Ø24 mm			
Ball Dia.	Ø7 mm			
		860004	Retaining Ring	1 pcs.

Tolerance alues	Dim. mm	0,5 up to 3	3 up to 6	6 up to 30	30 up to 400	Radi Cham	Angel
	Linear	±0,03	±0,05	±0,05	±0,10	±0,25	±0,00° 30'

Rev	Date	Modification	Drawn	Approval
00	18.09.2023	First Issue	G.Horton	T.Kirbiz

Material: Steel
Weight: 1792,50g
As per standart or specification: - - - - - -
Heat treatment: [X] YES [ ] NO
As per specification: - - - - - -
Surface Protection: Electroless Nickel Area: 8,84 dm²
[X] YES [ ] NO
Tolerancing: ISO2768-mK
General Tolerances:
Scale: 1/1 Project: - - - - - -
Folder: - - - - - -
Process Number: - - - - - -
Operation Name: - - - - - -
Operation No: - - - - - -
Distibution code: - - - - - -
Product Name: Friction Ring
Product No: 6-1.000-2.362-00-ST
EXTREME
Department RD
Rev: A
Sheet: 1/1

Orginal Format: A3